HUBEI HUAGONG WEIYE

COMPLETE EQUIPMENT CO., LTD.

CPDR Standardized Plastic Chemical Pump

Standardized plastic process pump with open impeller and back pull-out construction. Select material, sealing arrangement and hydraulic size for the specified chemical duty.



Design basis: DIN EN 22858 / ISO 2858

Wetted plastics: PP; high molecular polyethylene; PVDF

Temperature by material: PP 0 to +100 °C; PE -50 to +80 °C; PVDF -20 to +130 °C

Rated speeds: 2900 / 1450 r/min (50 Hz)

Construction: Open impeller; back pull-out; single/double mechanical seals

Select the duty point and motor for the actual medium. The dimension table repeats two size labels; confirm affected installation dimensions before ordering.

CPDR design and materials

CPDR标准塑料泵
Standardized Chemical Pump in Plastic

概　述

CPDR泵在设计、性能和尺寸方面，按照DIN EN22858（ISO 2858）制造。

结构特点

1、通过使用固体塑料结构，运行期间有最大的安全性。
2、覆盖整个泵壳的由可锻铸铁GGG40制造的坚固铠甲，能够吸收全部外力和扭矩。它减少了声发射，对泵内侧的爆炸提供更大的保护，因此，使操作人员更安全。
3、采用开式叶轮设计，具有足够间隙，使堵塞危险最小。
4、利用叶轮上的后叶片，将轴封和轴承泄压。
5、通过使用压入金属叶轮毂 、轴与轮毂的按键进行固定，使叶轮——轴构造与旋转方向无关。
6、后拉出设计，使得很容易接近所有零件，以便维修。
7、所有形式的单、双标准机械密封的密封腔。对于极端条件应用，我们采用单或双机械密封，这种密封在烟气脱硫装置中使用，性能良好。
8、对于“化学工件饰面”，利用防腐蚀的环氧树脂基漆，保护金属零件，例如轴承壳、铠甲等。
9、耐用的轴承，以及泵叶轮间隙的轴向可调节性（无须拆卸）。

材料及使用范围

- 与流体接触的泵零件，用下列标准塑料制造：
- **聚丙烯PP**
  温度范围0℃到+100℃
- **高分子聚乙烯PE1000**
  温度范围–50℃到+80℃
- **偏聚四氟乙烯PVDF**
  温度范围–20℃到+130℃
- 由于有多年使用化学工程材料的经验,所以选择这些材料以便满足泵结构的特殊要求。

Summarize

CPDR pumps are manufactured to DINEN 22858 (ISO 2858) standards in respect of design, performance and dimensions. This range of performance is extended for higher flows and heads by the RCNKU pump range.

Design Features

1. Maximum safety during operation through use of solid plastic construction.
2. A sturdy armour in ductile cast iron GGG 40 covering the entire pump casing is to absorb all external forces and torques. It reduces sound emission and provides increased protection from explosion inside the pump and therefore more safety for operational staff.
3. Danger of clogging minimised by using open impeller designs with liberal clearances.
4. Relief of shaft sealing and bearing by using back vanes on impellers.
5. Impeller–shaft arrangement independent of direction of rotation,through use of pressed–in metal hub and keying of shaft and hub.
6. Back pull–out design allows easy accessibility to all parts for maintenance purposses.
7. Sealing chamber for single and double standardized mechanical seals of all types. For extreme applications we usesingle or doube mechanical shaft seals which are giving excellent service in flue gas desulphurization plants
8. Metallic parts, ge., bearing housing,armour etc. protected to "chemical works finish" by using corrosion proof epoxy resin based paint.
9. Robust shaft bearings and axial adjustability of the pump impeller clearance without dismantling.

Materials:

Parts of the pump in contact with the liquid are manufactured from the follwing stan–dard plastics:
Polypropylene PP
Temperature range form
0℃ to +100℃
High Molecular Polyethylene PE 100
Temperature range from
–50℃ to +80℃
Polyvinylidene Fluoride PVDF
Temperature range from
–20℃ to +130℃
These materials have been selected as a result of many years of experience in the use of chemical engineering materials, to satisfy the special demands made in pump construction.

CPDR sectional construction

CS设计
Design CS

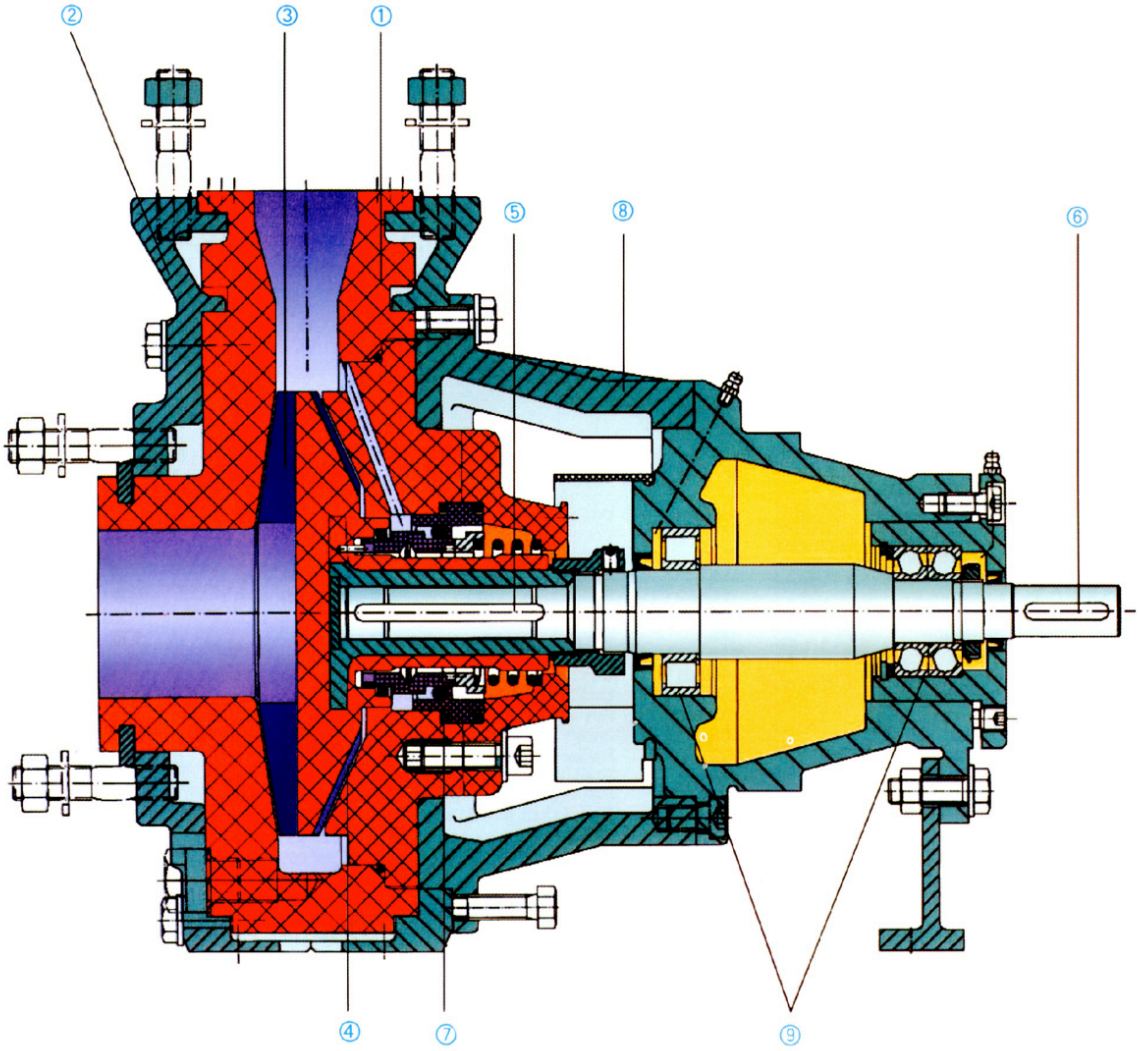

泵与图大体上一致，但设计可能有变化。
Pump complies generally with drawing but the design is subject to alteration.

CPDR parts and construction

Cs设计的剖面图和零件表

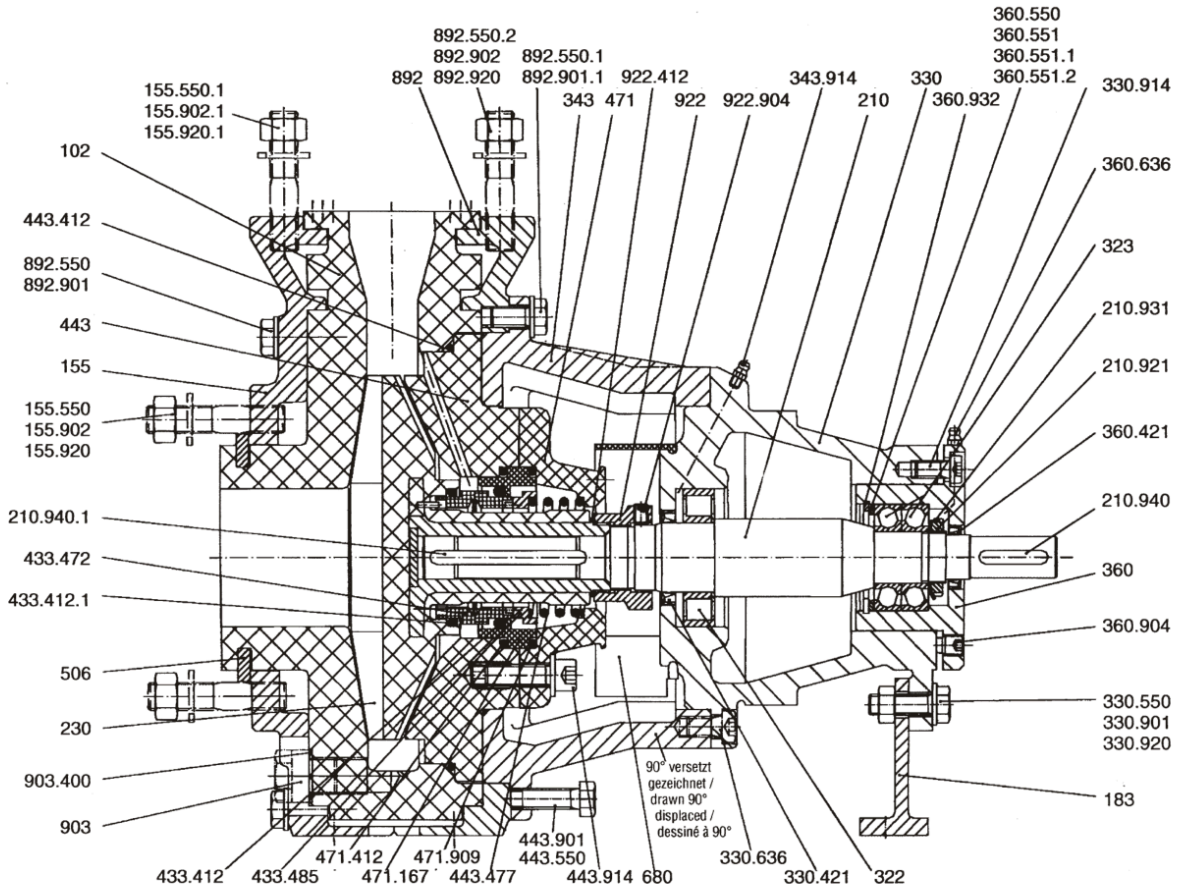

零件号 Part-No.	说明	Designation
102	蜗壳	Volute casing
155	壳框架	Frame casing
155.550(.1)	垫圈	Washer
155.902(.1)	柱螺栓	Stud
155.920(.1)	六角螺母	Hexagon nut
183	支撑	Support
210	轴	Shaft
210.921	轴螺母	Shaft nut
210.931	锁定垫圈	Lock washer
210.940(.1)	键	Key
230	叶轮	Impeller
322	径向滚柱轴承	Radial roller bearing
323	轴向滚珠轴承	Axial ball bearing
330	轴承架	Bearing bracket
330.421	径向轴密封环	Radial shaft sealing ring
330/50	垫圈	Washer
330.636	注油嘴	Grease nipple
330.901	六角螺钉	Hexagon screw
330.914	圆柱螺钉	Cyl. screw
330.920	六角螺母	Hexagon nut

零件号Part-No.	说明	Designation
343	轴承外壳	Pump bearing lantern
343.901	六角螺钉	Hexagon screw
343.914	圆柱螺钉	Cyl. screw
360	轴承盖	Bearing cover
360.421	径向轴密封环	Radial shaft sealing ring
360.550	垫圈	Washer
360.551(.1,.2)	间隔垫圈	Distance washer
360.636	注油嘴	Grease nipple
360.904	螺纹销	Threaded pin
360.932	开口簧环	Circlip
433	机械密封	Mechanical seal

CPDR sealing options

油封和零件表

设计 C1

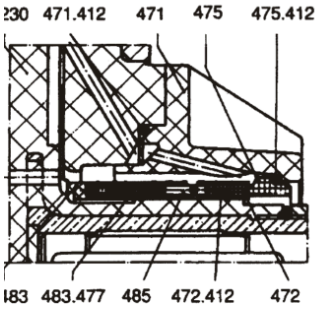

设计 C1X

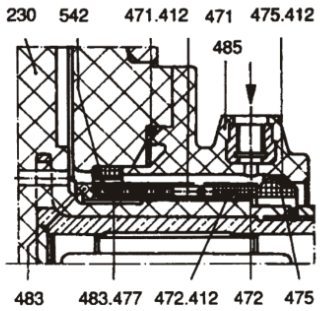

设计 C2

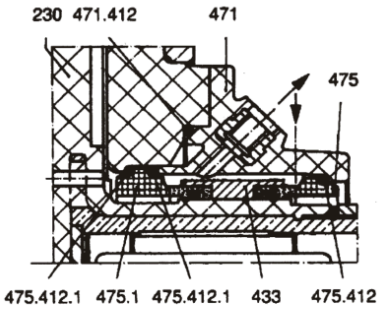

设计 CA

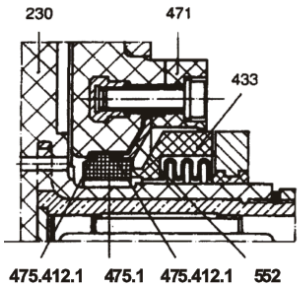

设计 CSA

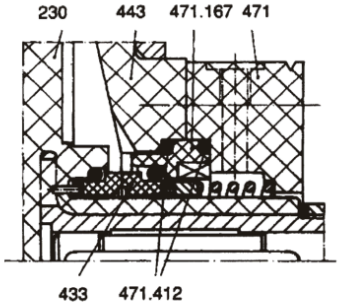

设计 C1AQ

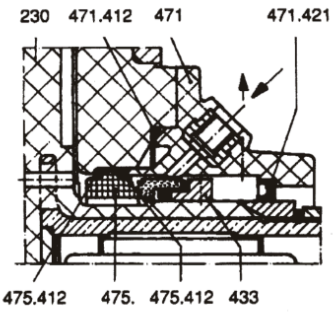

零件号 Part-No.	说明	Designation
433.412(.1)	"O"型环	"O"–ring
433.472	密封环	Seal ring
433.477	弹簧	Spring
433.485	转动环	Rotating ring
443	密封插件	Seal insert
443.412	“O”型环	O–ring
433.550	垫圈	Washer
443.914	圆柱螺钉	Cyl.screw
471	机械密封	Mechanical seal cover
471.167	盖插件	Cover insert
471.412	“O”型环	O–ring
471.421	径向轴密封环	Radial shaft sealing ring
472	密封环	Seal ring
472.412	“O”型环	O–ring
475(.1)	副环	Counter ring
475.412(.1)	“O”型环	O–ring
483	弹簧隔环	Spring cage
483.477	弹簧	Spring
485	转动环	Rotating ring
506	转动环	Retaining ring
542	活门衬套	Throttle bushing
552	横拉条	Spanner

零件号 Part-No.	说明	Designation
680	盖	"Covering
892	底板	Sole plate
892.550 (.1,.2)	垫圈	Washer
892.901(.1)	六角螺钉	Hexagon screw
892.902	柱螺钉	Stud
892.920	六角螺母	Hexagon nut
903	塞	Plug
903.400	垫片	Gasket
922	叶轮螺母	Impeller nut
922.412	“O”型环	O–ring
922.904	螺纹销	Threaded pin

零件号和说明符合 DIN24250
Part–No.and designation in accordance with DIN 24250

CPDR dimensions

Dimension 尺寸

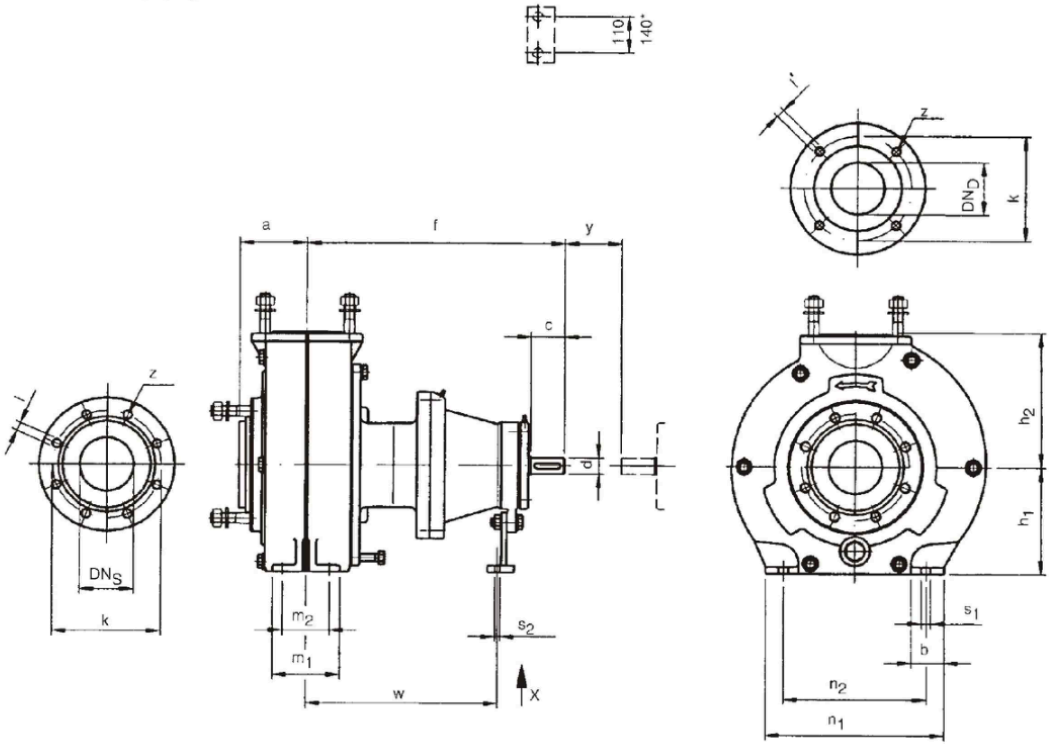

Design without armour 不带夹套设计

Type 规格	Size 型号	BB CP 1)	Pump Dimensions 泵尺寸				Foot Dimensions 地角尺寸									Shaft End 轴端		Flange Dimensions 法兰尺寸							
			a	f	h1	h_2	b	m_1	m_2	n_1	n_2	s_1	s_2	w	y	d	c	DN_D	k	l	Z	DN_S	k	l	Z
CPDR	50-32-160	I	80	385	132	160	50	100	70	240	190	M12	M12	285	100	24	50	32	100	M16	4	50	125	M16	4
	50-32-160	I	80	385	160	180	50	100	70	240	190	M12	M12	285	100	24	50	32	100	M16	4	50	125	M16	4
	80-65-160	I	100	385	160	180	50	100	70	265	212	M12	M12	285	100	24	50	65	145	M16	4	80	160	M16	8
	80-50-200	I	100	385	160	200	50	100	70	265	212	M12	M12	285	100	24	50	50	125	M16	4	80	160	M16	8
	65-40-250	II	100	500	180	225	65	125	95	320	250	M12	M12	370	100	32	80	40	110	M16	4	65	145	M16	4
	80-50-315	II	125	500	225	280	65	125	95	345	280	M12	M12	370	100	32	80	50	125	M16	4	80	160	M16	8
	100-80-160	II	100	500	160	200	65	125	95	280	212	M12	M12	370	100	32	80	80	160	M16	8	100	180	M16	8
	100-65-250	II	125	500	200	250	80	160	120	360	280	M16	M12	370	140	32	80	65	145	M16	4	100	180	M16	8
	125-80-200	II	125	500	180	250	65	125	95	345	280	M12	M12	370	140	32	80	80	160	M16	8	125	210	M16	8
CPDR	125-80-250	II	125	500	225	280	80	160	120	400	315	M16	M12	370	140	32	80	80	160	M16	8	125	210	M16	8
	125-80-315	III	125	530	250	315	80	160	120	400	315	M16	M12	370	140	42	110	80	160	M16	8	125	210	M16	8
	125-80-400	III	125	530	280	355	80	160	120	435	355	M16	M12	370	140	42	110	80	160	M16	8	125	210	M16	8
	125-100-250	III	140	530	225	280	80	160	120	400	315	M16	M12	370	140	42	110	100	180	M16	8	125	210	M16	8
	150-125-315	III	140	530	280	355	100	200	150	500	400	M20	M12	370	140	42	110	125	210	M16	8	150	240	M20	8
	150-125-400	III	140	530	315	400	100	200	150	500	400	M20	M12	370	140	42	110	125	210	M16	8	150	240	M20	8
	200-150-400	IV	160	670	315	450	100	200	150	550	450	M20	M12	500	180	48	110	150	240	M20	8	200	295	M20	12
	250-200-315	IV	180	670	355	450	100	200	150	550	450	M20	M12	500	180	48	110	200	295	M20	12	250	355	M24	12
	250-200-400	IV	180	670	355	500	100	200	150	550	450	M20	M12	500	180	48	110	200	295	M20	12	250	355	M24	12
	300-250-500	VI	250	900	475	670	130	260	190	800	670	M24	M16	680	250	75	150	250	355	M24	12	300	410	M24	12
	350-300-400	VI	300	900	500	670	180	360	250	900	750	M24	M16	680	250	75	150	300	410	M24	12	350	470	M24	16

CPDR performance maps

型谱图
Quantity Q

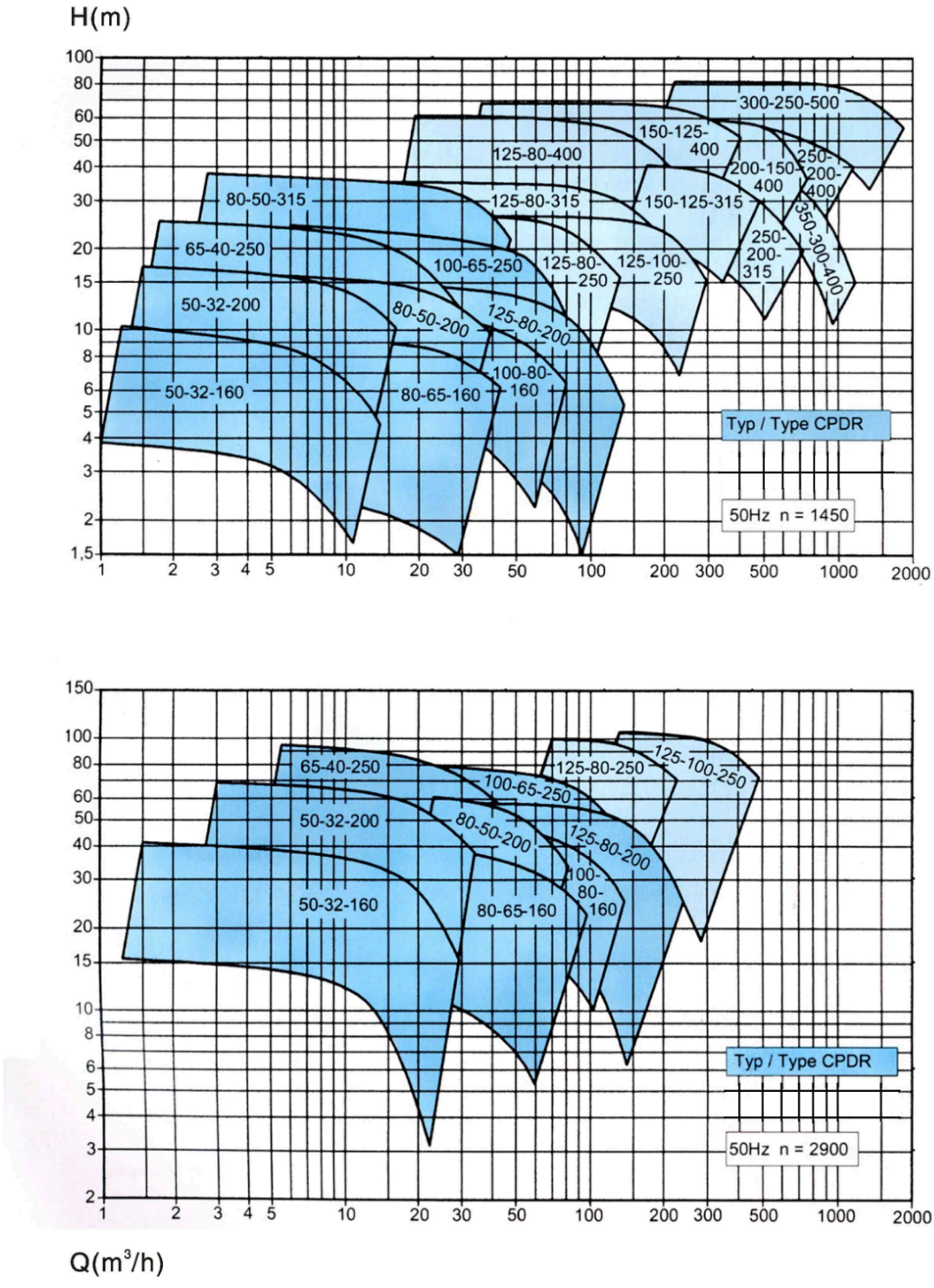

CPDR supplementary sectional view

