RE 50 Transportable Waste Incineration Plant

Container-based multi-chamber incineration with flue-gas cooling, dry reagent treatment, fabric filtration and control system. Final layout and emissions design are project-specific.

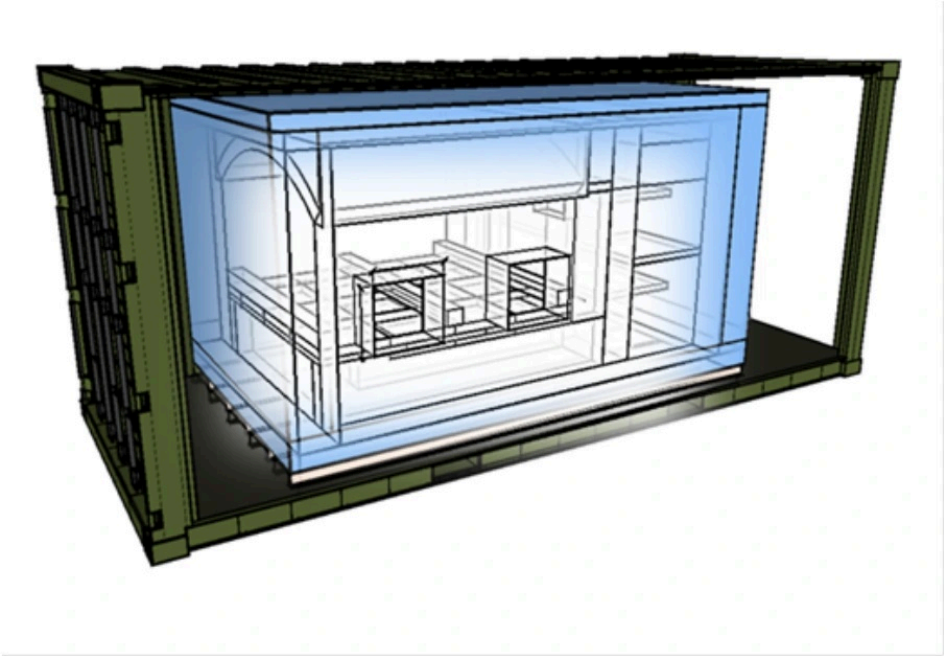

Design throughput: 50 kg/h at 12.5 MJ/kg NCV

Design calorific range: 12-18 MJ/kg

Connected load: 15 kW (design reference)

Waste feed limits: Water <=30%; inert <=20%; glass <=3%; size <=450 mm

Arrangement: 20-ft container concept; final one/two-container layout by design

Incineration process flow

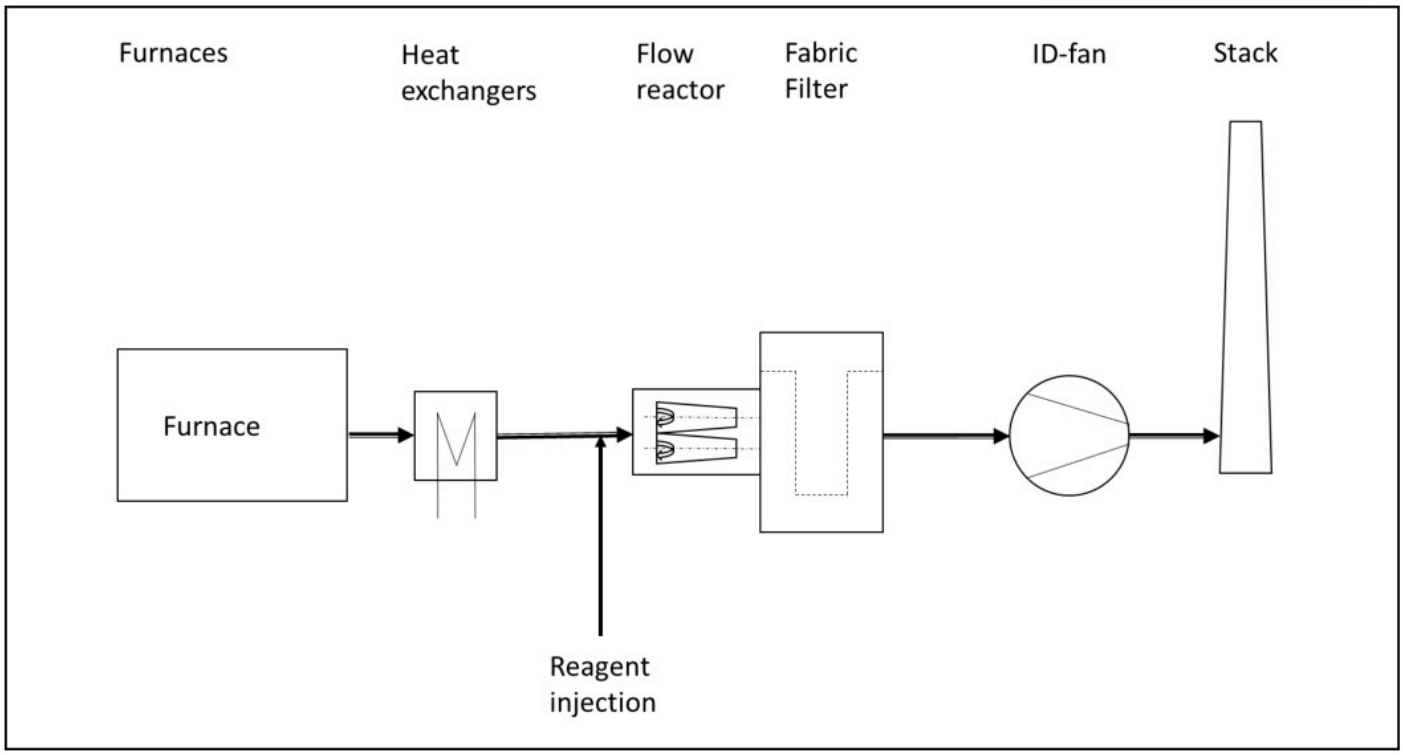

Multi-chamber furnace concept

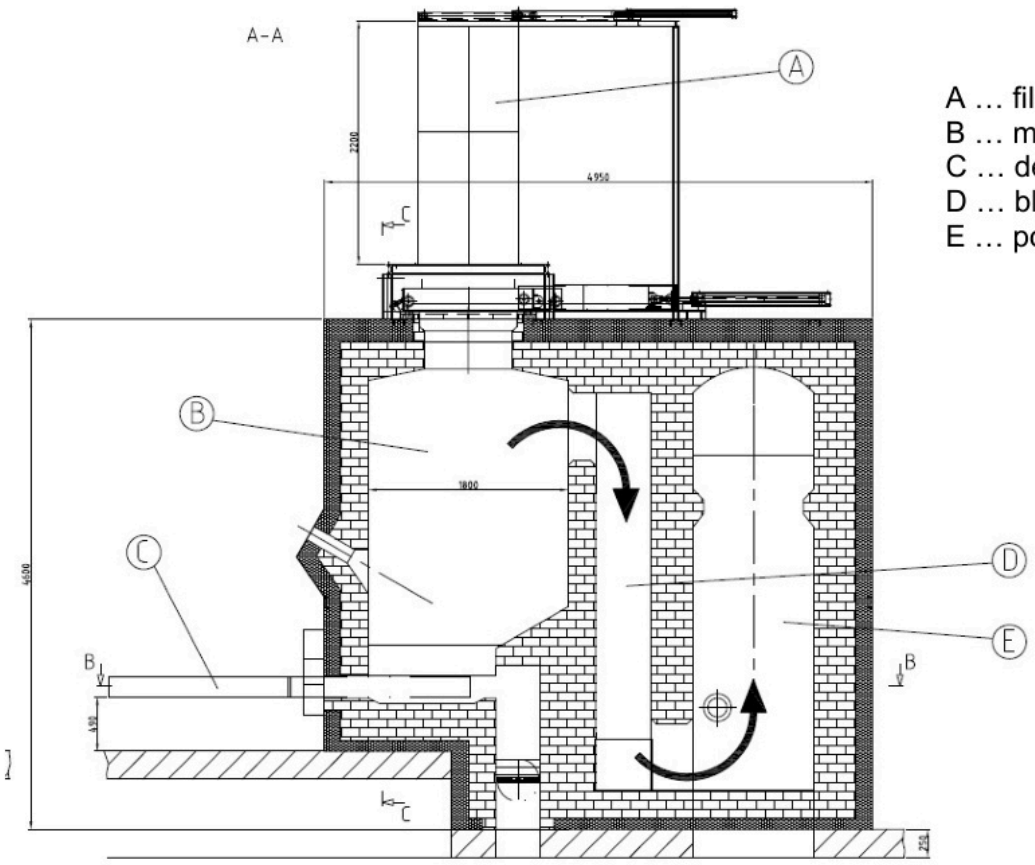

Incineration design data

basic design data depend on the quantity and quality of the waste and is given for the type RP14-150/1-2 as follows:

A) Application:

Waste specification:	solid waste
Through-put	max. 50/150 kg/h (12.5 MJ/kg)
Calorific value (n. c. v.):	12 – 18 MJ/kg (design)
Composition:	water content: max 30 %
	inert material: max 20 %
	glas: max 3 %
Size:	max. 450 mm feed size

The operator is requested to keep waste composition as homogeneous as possible.

B) Incinerator:

Type:	SECS: RE 50/RE 150
Capacity:	50/150 kg/h (at n.c.v. of 12.5 MJ/kg)
Design:	Multi-chamber incinerator, consisting of:
	Main combustion chamber (furnace)
	Turbulence and mixing zone
	Post combustion chamber
Feeding:	automatic top side
Ash removal:	automatic
Fuel:	RE 50 → Diesel oil, appr. 0,07 m^3/h
	RE 150 → Diesel-oil, appr. 0.2 m^3/h
Flue gas volume	RE 50 → appr. 700 to 1.000 Nm^3/h
	RE 150 → gas, appr. 1.000 – 1.200 Nm^3/h
Flue gas volume flow:	approx. 1.100/ 3,300 m^3_N/h
Electric power supply:	three-phase current 220/380 V; 60 Hz
Connected load	RE 50 → appr. 15 kW
	RE 150 → 35 kW

Flue-gas cooling concept

Flue gas Treatment

ue gas cooling

Bevor leaving the furnace the flue will be cooled by an internal flue gas cooler. The integrated flue gas cooler is positioned inside the furnace casing.

As shown in Fig. 5 the cooler is equipped with economizer bundles passed through by a Water-Glykol mixture.

The flue gas is cooled down from max. 1,200 °C to about 140°C to allow a safe operation of the fabric filter and the dry sorption process.

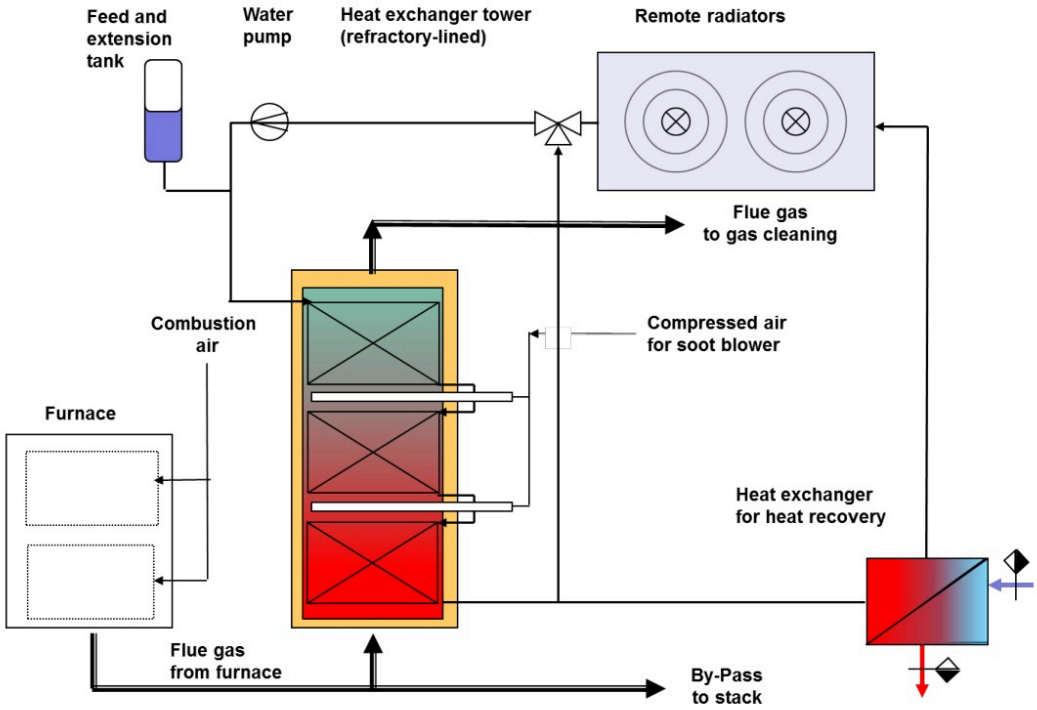

Fig. 5 *Schematic view of a furnace with flue gas cooling system*

The economizer bundles are integrated in a closed water circle equipped with a heat exchanger tc emit the warmth to atmosphere. In parallel the warmth can be used for heating devices. The priori of the control system is at keeping the correct flue gas temperature at the outlet of the furnace to protect the downstream flue gas treatment plant. The use of the warmth is on a lower level of prio ty.

The heat exchanger is completely integrated in the steel casing of the furnace which internally is completely covered by bricks and insulation material. The economizer bundles are placed by oper ings in the flue gas stream. The bundles are screwed to the side walls of the furnace and can be released easily for maintenance and cleaning or repair.

Process monitoring schematic

